IEEE MICRO ELECTRONICS BOOT CAMP

Binary code – 0000 Grey code - 0000

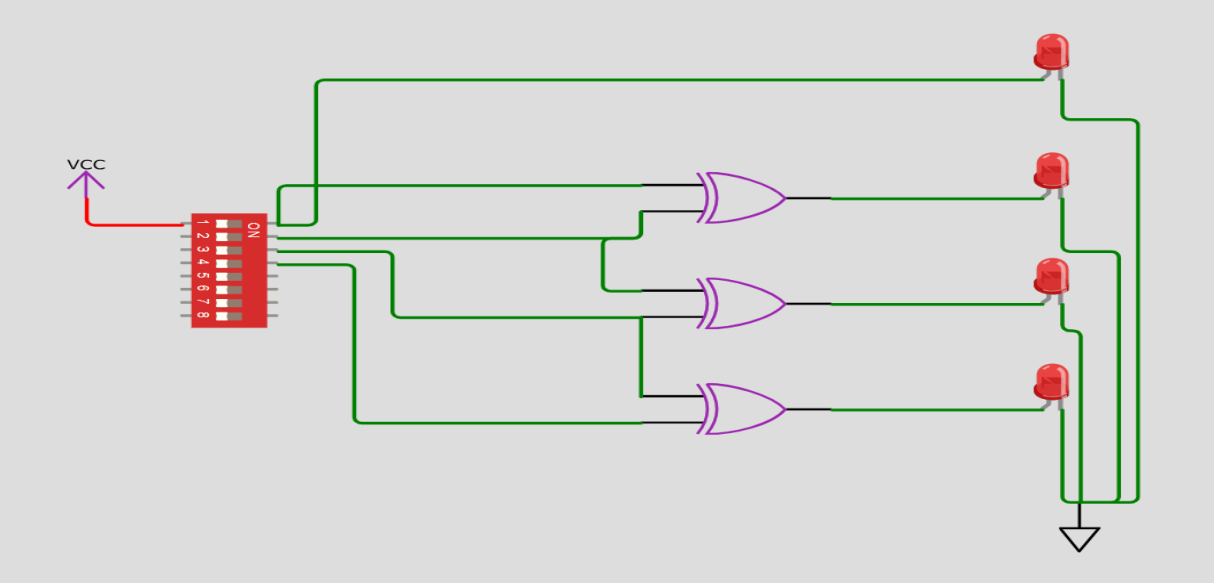

Binary code – 0101 Grey code – 0111

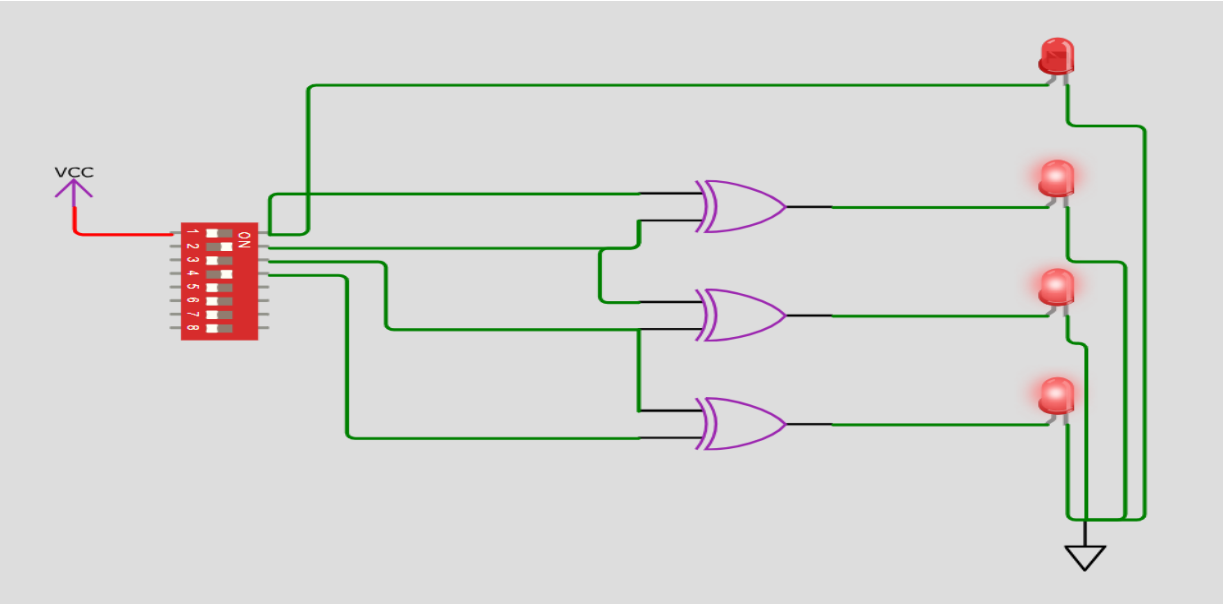

Binary code – 0111 Grey code – 0100

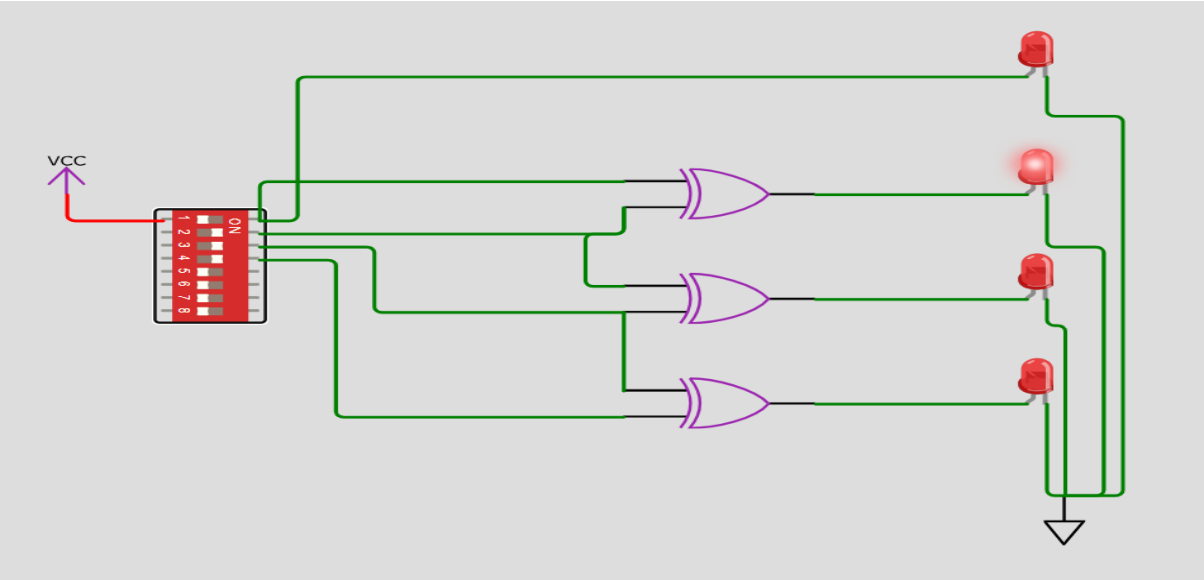

Binary code – 1010 Grey code - 1111

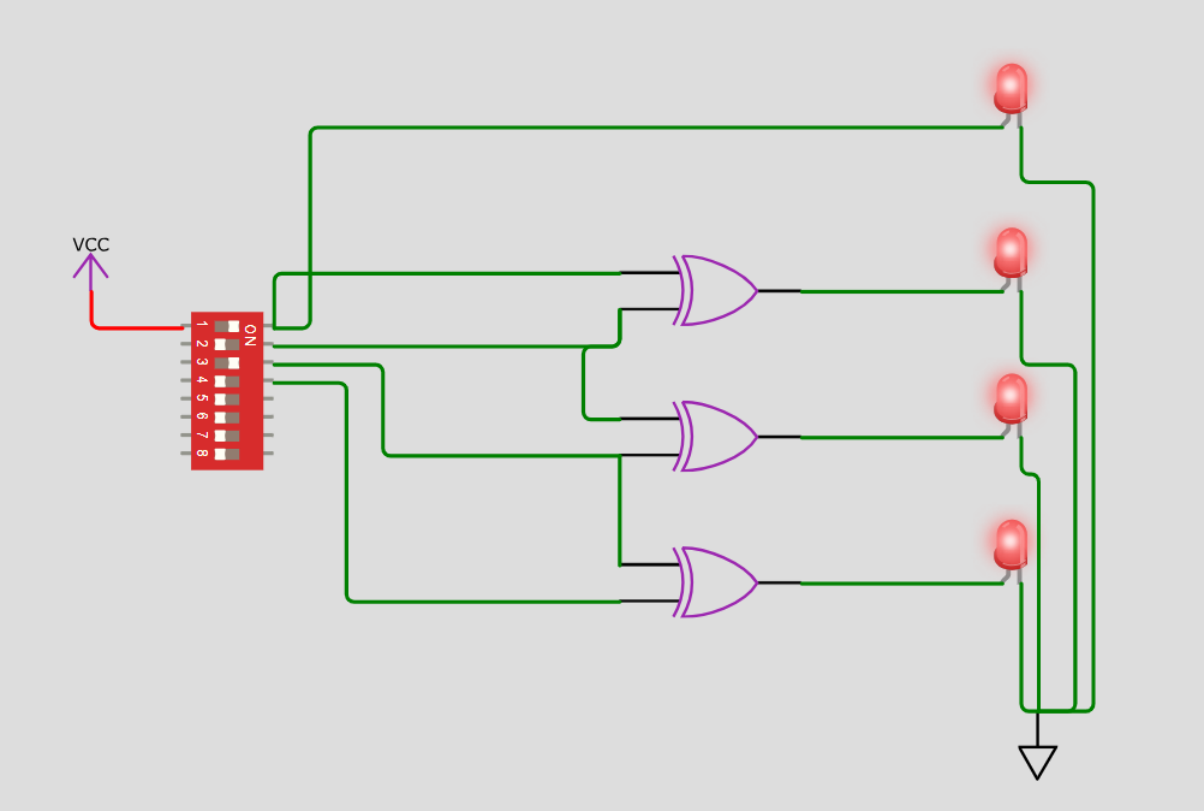

DECIMAL	BINARY CODE (B3 B2 B1 B0)	GREY CODE (G3 G2 G1 G0)
0	0000	0000
1	0001	0001
2	0010	0011
3	0011	0010
4	0100	0110
5	0101	0111
6	0110	0101
7	0111	0100
8	1000	1100
9	1001	1101
10	1010	1111
11	1011	1110
12	1100	1010
13	1101	1011
14	1110	1001
15	1111	1000